C.R. LAURENCE CO., INC.
PROFESSIONAL QUALITY

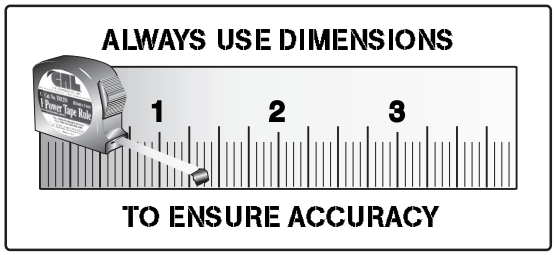

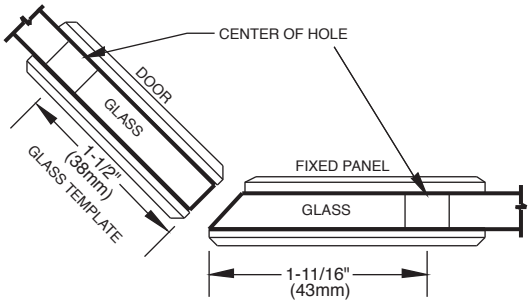

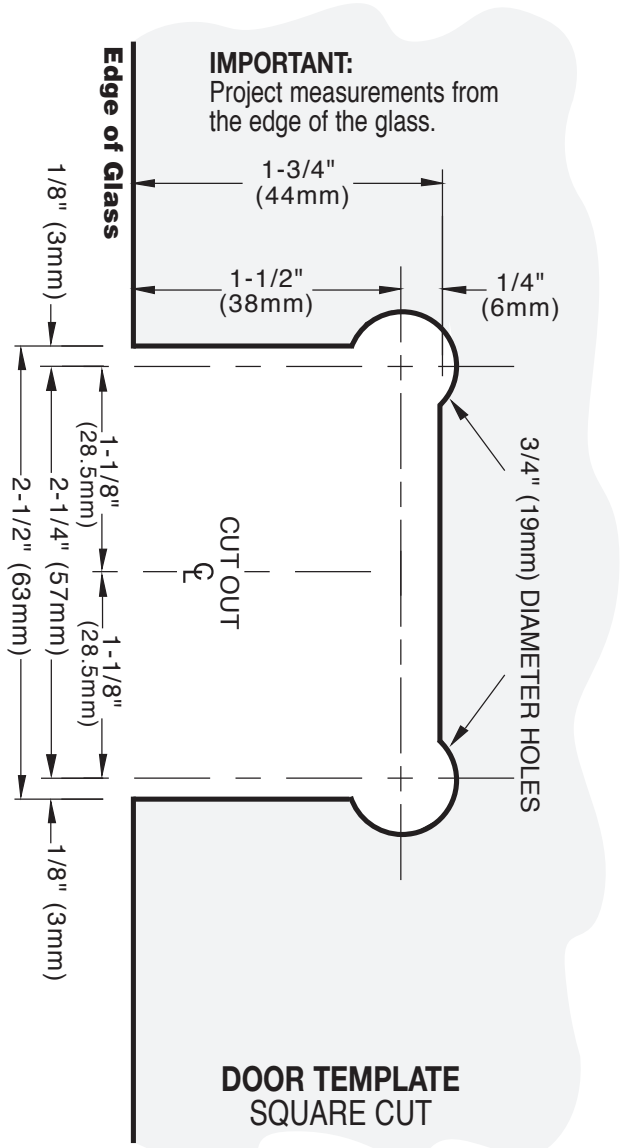

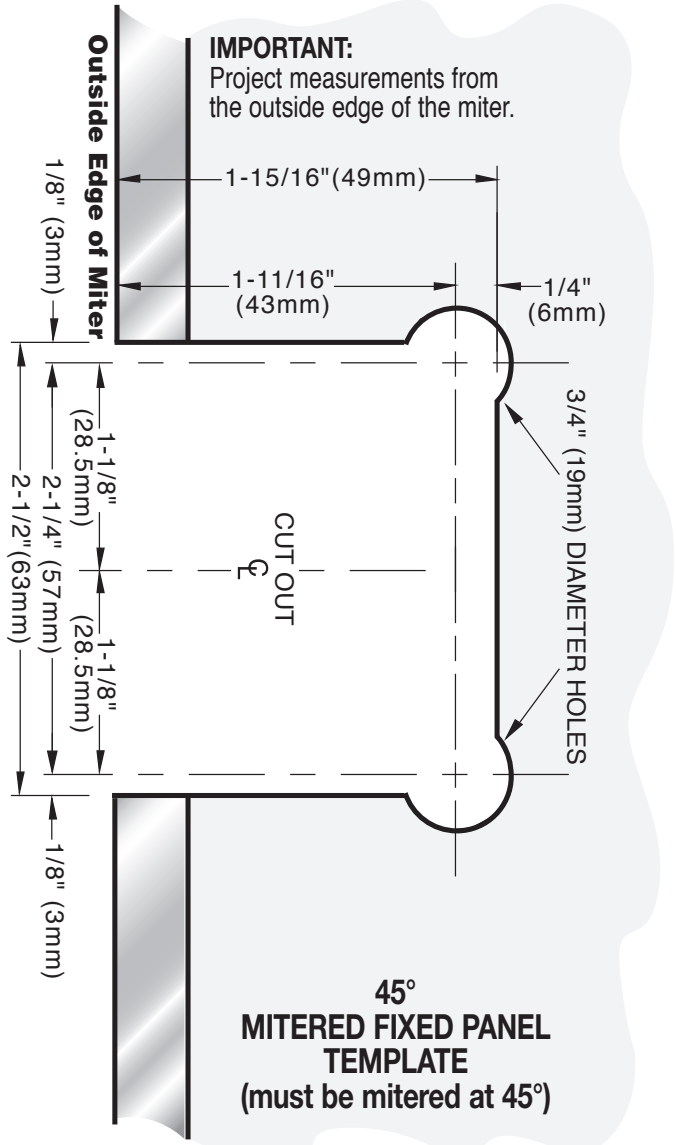

PINNACLE

135° Glass-to-Glass Hinge

CAT No. PIN345 (Adjustable)

4C-18B

C.R. Laurence Co., Inc.
crlaurence.com

For technical assistance in the United States call toll free (800) 421-6144; from Canada call toll free (877) 421-6144; Outside the U.S. and Canada call (323) 588-1281. Ask for Tech Sales at Extension 7740. Toll free fax (800) 458-7496.

© Copyright 2005, C.R. Laurence Co., Inc_SDT21_U5