C.R. LAURENCE CO., INC.
PROFESSIONAL QUALITY

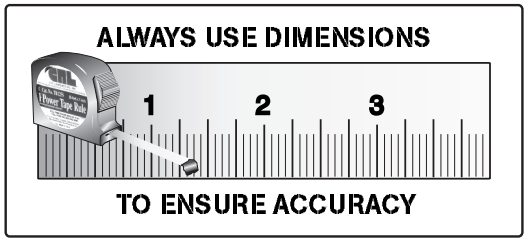

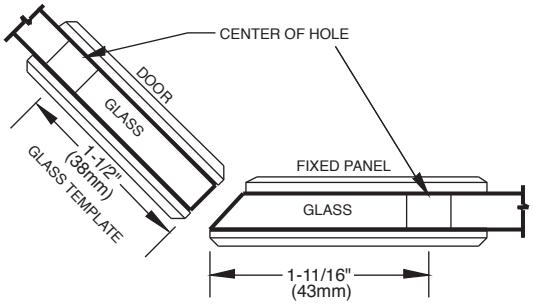

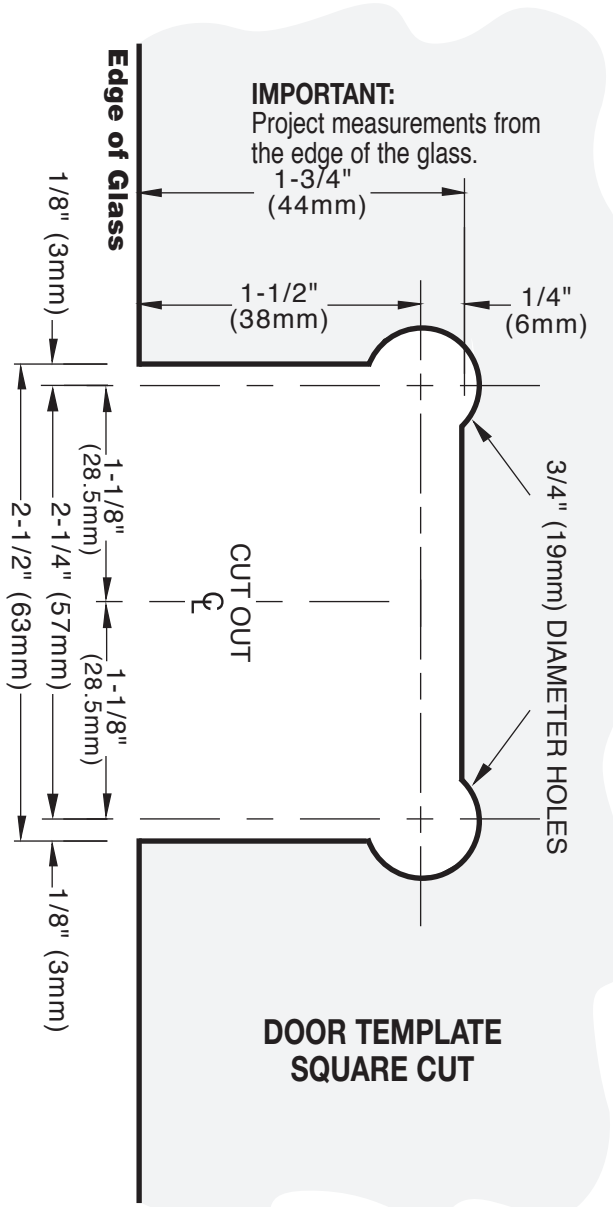

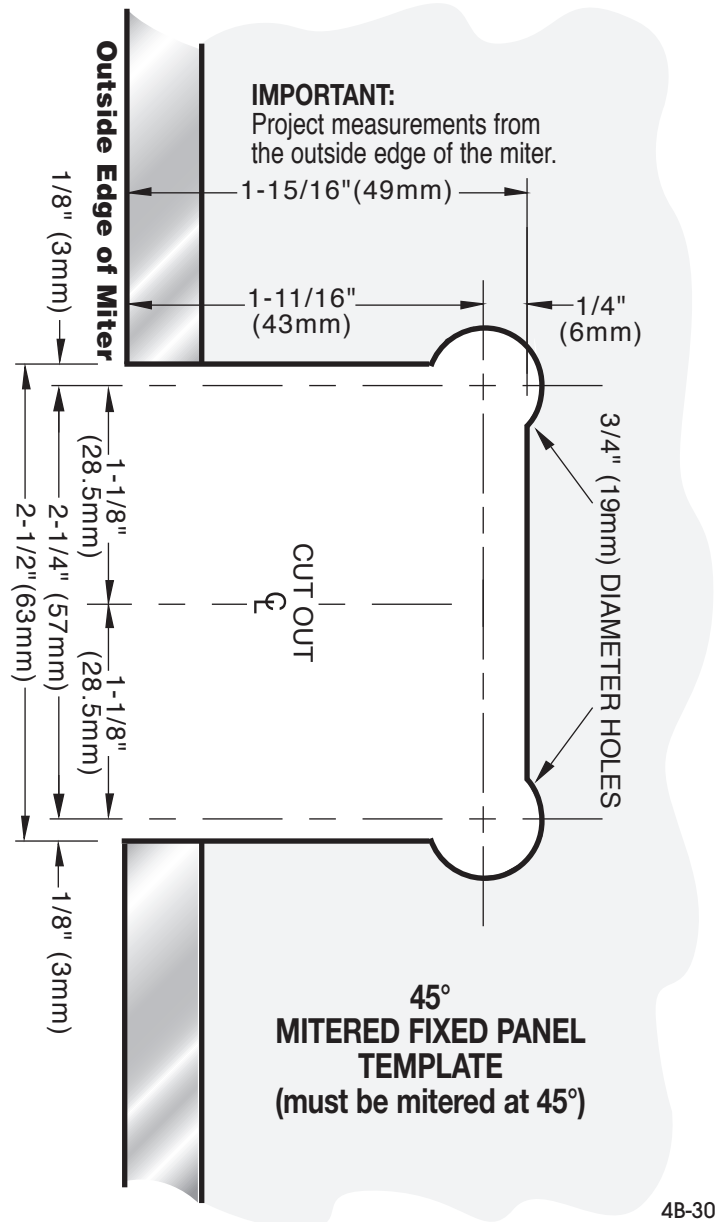

GENEVA

135° Glass-to-Glass Hinge

CAT No. GEN345 (Adjustable)

4B-30

© Copyright 2005, C.R. Laurence Co., Inc_SDT21_U5